Stratos

SRE135/SRE135L
SRE160/SRE160L

The Stratos SRE rider seated stackers are available with capacities of 1350 and 1600 kg. The four models, two with fixed and two with elevating support arms, are available with lift heights up to 6300 mm.

Technical Details		SRE135/SRE135L	SRE160/SRE160L
Power unit		electrical, battery	electrical, battery
Operating type		ride on	ride on
Rated capacity	kg	1350	1600
Load centre	mm	600	600
Max. axle load castor/drive wheels			
without load	kg	1360/1405	1480/1530
with rated load	kg	1490/1535	1610/1655
Max. axle load supp.wheels			
without load	kg	570/660	680/705
with rated load	kg	1790/1880	2150/2180
Wheel type		polyurethane	polyurethane
dimension, support arm wheels	mm	Ø 85x75 1)	Ø 85x75 1)
dimension, drive wheel	mm	Ø 250	Ø 250
dimension, castor wheels	mm	Ø 150x50	Ø 150x50
Travel speed, without/with rated load	km/h	9,4/8,6	9,4/8,6
Lift speed, without/with rated load	m/s	0,36 2)/—	0,25/0,15
with 1000kg load	m/s	0,23 2)	0,19
with 1350kg load	m/s	0,20 2)	0,17
Lowering speed, without/with rated load	m/s	0,35/0,46 2)	0,40/0,46
Gradient, without/with rated load	%	15/8	15/8
Service brake		hydraulic	hydraulic
Parking brake		mechanical	mechanical
Drive motor/Intermittent rating	kW/%	2,6/60	2,6/60
Lift motor/Intermittent rating	kW/%	5,0/20	5,0/20
Steering system		electronic	electronic
Speed control, number of steps		transistor, stepless	transistor, stepless
Number of steering wheel turnings		6 or 6—12	6 or 6—12

1) Bogie
2) Valid for trucks with Triplex Hi-Lo mast

Dimensions, mm		SRE135	SRE135L	SRE160	SRE160L
x	Front axle to fork front face				
	Duplex/Triplex	827/809	830/812	782/782	785/785
h_6	Height of cab	1980	1980	1980	1980
h_7	Height of driver's seat	900—980	900—980	900—980	900—980
h_{13}	Height of lowered fork	90	90	90	90
l_2	Truck length incl. back of fork				
	Duplex/Triplex	1044/1063	1085/1104	1090/1090	1131/1131
b_1	Chassis, width	1020	1020	1020	1020
e	Fork width	180	180	180	180
l	Fork length	1150	1150	1150	1150
b_5	Width across fork	570	570	570	570
m_1	Floor clearance	25	25	25	25
W_a	Turning radius				
	Duplex/Triplex	1912/1955	1912/1955	1912/1955	1912/1955
A_{st}	Aisle width				
	Duplex/Triplex	2659/2671	2699/2712	2691/2691	2731/2731

Truck performance and dimensions are nominal and subject to tolerances.
BT Products AB products and specifications are subject to change without notice.
All data is based on VDI 2198.

SRE135L/SRE160L

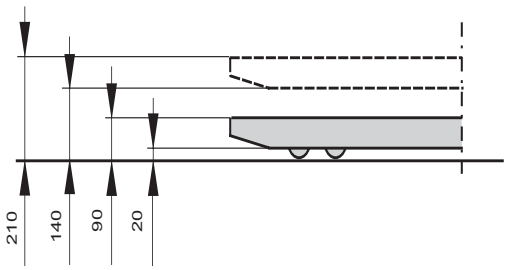

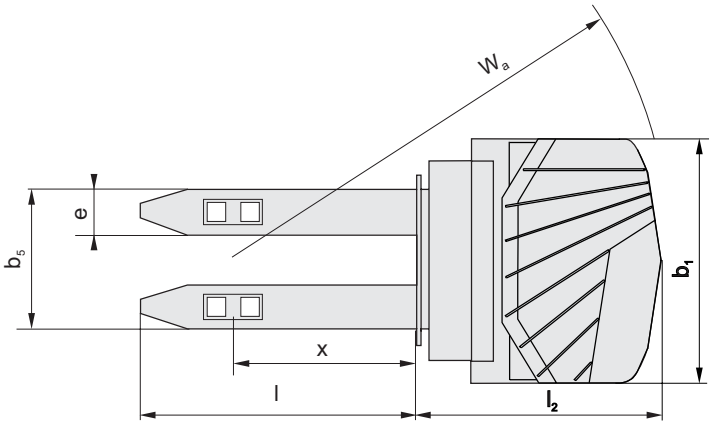

Mast			SRE135/SRE135L								
h_3	**Lift height**	**mm**	**2800**	**2900**	**3350**	**3750**	**4150**	**4150**	**4500**	**4800**	**5400**
Duplex Tele											
h_1	Height of mast, min. [1]	mm	1937		2212	2422	2622				
h_2	Free lift	mm	—		—	—	—				
h_4	Height of mast, max. [1]	mm	3317		3867	4277	4677				
Duplex Hi-Lo											
h_1	Height of mast, min. [1]	mm		1987	2212	2422	2622				
h_2	Free lift	mm		1518	1743	1943	2143				
h_4	Height of mast, max. [1]	mm		3417	3867	4277	4677				
Triplex Hi-Lo											
h_1	Height of mast, min. [1]	mm						1948	2065	2165	2365
h_2	Free lift	mm						1476	1592	1692	1892
h_4	Height of mast, max. [1]	mm						4670	5021	5321	5921
Weight without battery [2]		kg	1175	1180	1200	1220	1240	1335	1365	1375	1400
Battery (5h discharge), min./max.		V/Ah	24/360—600								
Battery weight, min./max.		kg	370—530								

Mast			SRE160/SRE160L								
h_3	**Lift height**	**mm**	**2900**	**3350**	**3750**	**4150**	**4400**	**4800**	**5400**	**5700**	**6300**
Duplex Tele											
h_1	Height of mast, min. [1]	mm	2013	2238	2438	2638					
h_2	Free lift	mm	—	—	—	—					
h_4	Height of mast, max. [1]	mm	3443	3893	4293	4693					
Duplex Hi-Lo											
h_1	Height of mast, min. [1]	mm	2013	2238	2438	2638					
h_2	Free lift	mm	1518	1743	1943	2143					
h_4	Height of mast, max. [1]	mm	3443	3893	4293	4693					
Triplex Hi-Lo											
h_1	Height of mast, min. [1]	mm					2075	2208	2408	2508	2708
h_2	Free lift	mm					1465	1598	1798	1898	2098
h_4	Height of mast, max. [1]	mm					5058	5458	6058	6358	6958
Weight without battery [2]		kg	1295	1320	1355	1380	1440	1470	1510	1530	1585
Battery (5h discharge), min./max.		V/Ah	24/360—450, 24/480—600								
Battery weight, min./max.		kg	370—449, 450—530								

1) Mast height +120 mm with raised support arms
2) Sideshift weight +15 kg
SRE135L +175 kg
SRE160L +160 kg

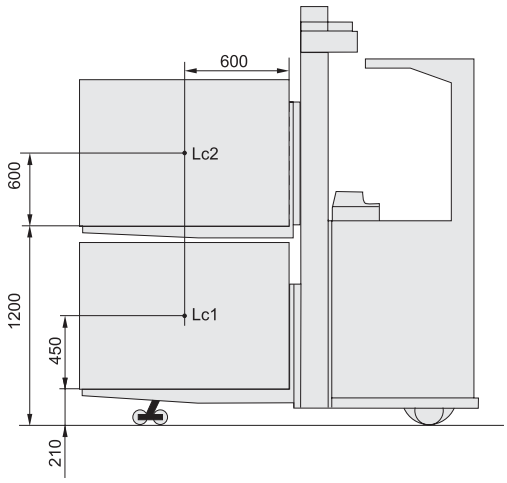

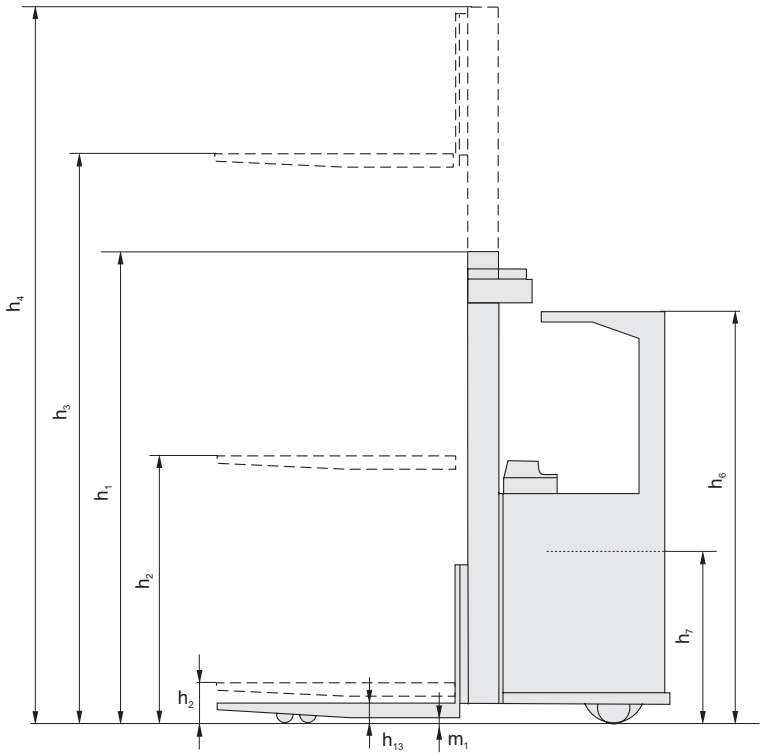

- The SRE135L and SRE160L versions of the rider seated stacker range feature elevating support arms that allow effective operation on ramps or over uneven surfaces. This also allows double pallet handling with 675+675 kg (SRE135L) and 800+800 kg (SRE160L).
- Electronic steering is a standard feature. The small “spinner wheel” provides fingertip control for the highest levels of manoeuvrability.
- The driver’s cab provides total protection for the operator, and comfort is assured with fully adjustable seat, comfortable armrest and pedal positions as in a car.
- Clear view mast and overhead guard enables safe load handling at all heights. The visibility window also ensures excellent visibility in pallet transport.
- The battery is easily changed in multishift operation via a built-in rollerbed system.

Truck features	SRE135	SRE135L	SRE160	SRE160L
Bogie fork wheels	S	S	S	S
Double pallet handling	—	S	—	S
Elevating support arms	—	S	—	S
Controls and instruments				
Hour meter	S	S	S	S
Power/Electronic steering	S	S	S	S
Driving features				
Electronic speed control	S	S	S	S
Safety features				
Clear-view mast	S	S	S	S
Driver detection system	S	S	S	S
Emergency cut-off	S	S	S	S
Load support	O	O	O	O
Drivers compartment features				
Adjustable seat	S	S	S	S
Adjustable steering wheel	S	S	S	S
On-board data terminal mount (E-bar)	S	S	S	S
Document pocket	S	S	S	S
Maintenance features				
Easy access for maintenance	S	S	S	S
Fault diagnosis facility	S	S	S	S
Battery management features				
Battery status indicator	S	S	S	S
Side-ways battery change	S	S	S	S
Heavy duty battery compartments	O	O	O	O

S = Standard feature O = Optional feature — = Not available

ITS, Sweden — 747302-040, 0610

BT
SE-595 81 Mjölby Sweden
Tel: +46 (0)142 860 00
Fax: +46 (0) 142 866 00
Email: info@bt-forklifts.com
www.bt-forklifts.com