Towing truck 3.0 - 5.0 ton

BT movit

S-series

TSE300

TSE500

TOYOTA

MATERIAL HANDLING

www.toyota-forklifts.eu

Towing truck

Truck specifications					TSE300	TSE500
Identification	1.1	Manufacturer			BT	BT
	1.2	Model			TSE300	TSE500
	1.3	Drive			Electric	Electric
	1.4	Operator type			Stand on	Stand on
	1.5	Load capacity/rated load	Q	kg	3000	5000
	1.7	Rated drawbar pull	F	N	1320	1650
	1.9	Wheelbase	y	mm	1319	1319
Weight	2.1	Service weight without battery		kg	1206 [1)]	657 [1)]
	2.3	Axle load, without load, drive/support arm wheels		kg	1043/734	683/390
Wheels	3.1	Drive/support arm wheels			Vulkollan	Vulkollan
	3.2	Wheel size, front		mm	Ø 250x100	Ø 250x100
	3.3	Wheel size, rear		mm	Ø 140x80	Ø 140x80
Dimensions	4.2.1	Overall height	h_{15}	mm	1284	1284
	4.8	Stand height	h_7	mm	130	130
	4.12	Coupling height				
		towing pin	h_{10}	mm	188/283/378/473	188/283/378/473
		towing ball	h_{10}	mm	298/393/488/583	298/393/488/583
	4.19	Overall length	l_1	mm	1571	1571
	4.21	Overall width	b_1/b_2	mm	790/799	790/799
	4.26	Distance between support arms	b_4	mm	613	613
	4.32	Ground clearance, centre of wheelbase	m_1/m_2	mm	63/71	63/71
	4.35	Turning radius	W_a	mm	1508	1508
	4.44	Clear width driver compartment entrance	l_{24}	mm	450	450
Performance data	5.1	Travel speed, with/without load		km/h	9,0/12,0	6,0/11,0
	5.7	Gradeability, with/without load		%	6/13	3/13
	5.10	Service brake			1 stage electromagnetic	1 stage electromagnetic
Electric motor	6.1	Drive motor rating S2 60 min		kW	2,8	2,8
	6.4	Battery voltage, nominal capacity K_5		V/Ah	24/465-620	24/465-620
	6.5	Battery weight, min./max.		kg	338/501	338/501
	6.6	Energy consumption acc to VDI cycle [2)]		kWh/h		
Other	8.1	Type of drive control			BT Powerdrive	BT Powerdrive
	8.4	Sound level at the driver's ear according to EN 12 053			66	66

1) With small battery, add 125 kg counterweight
2) Contact your supplier for information.

All data are based on table configuration. Other configurations may give other values.
Truck performance and dimensions are nominal and subject to tolerances.
Specifications are subject to change without notice.

Dimensional drawings

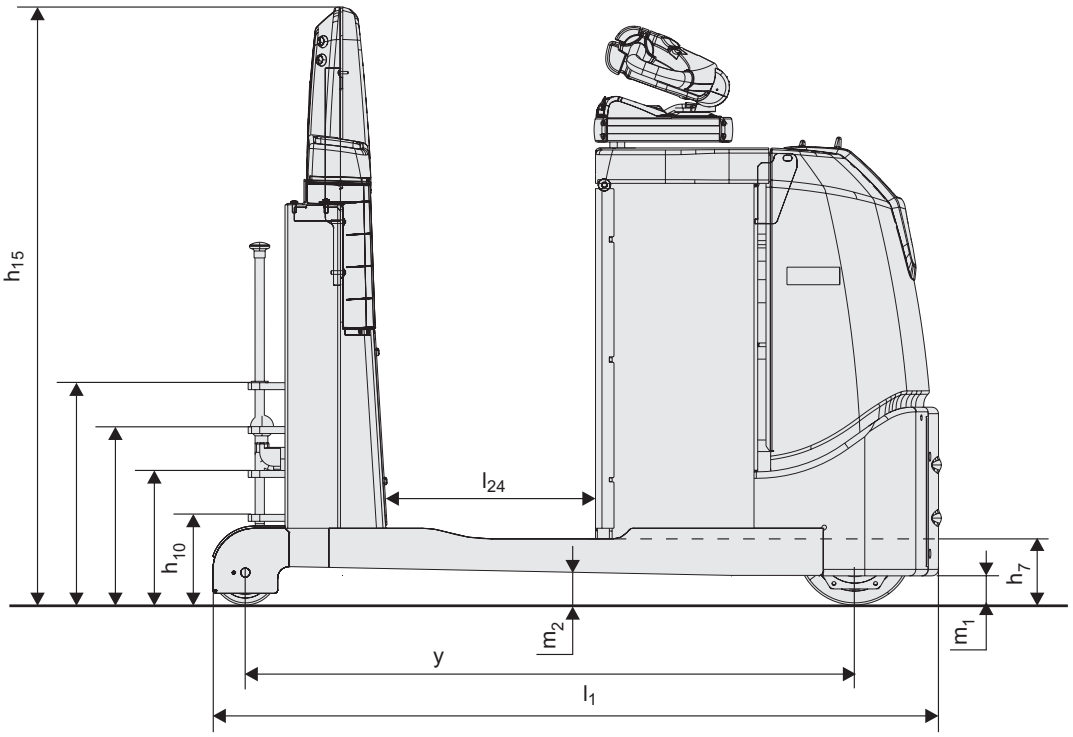

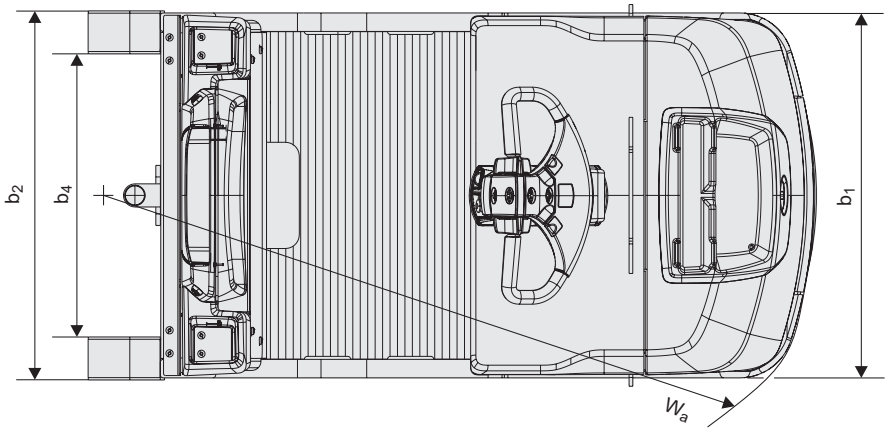

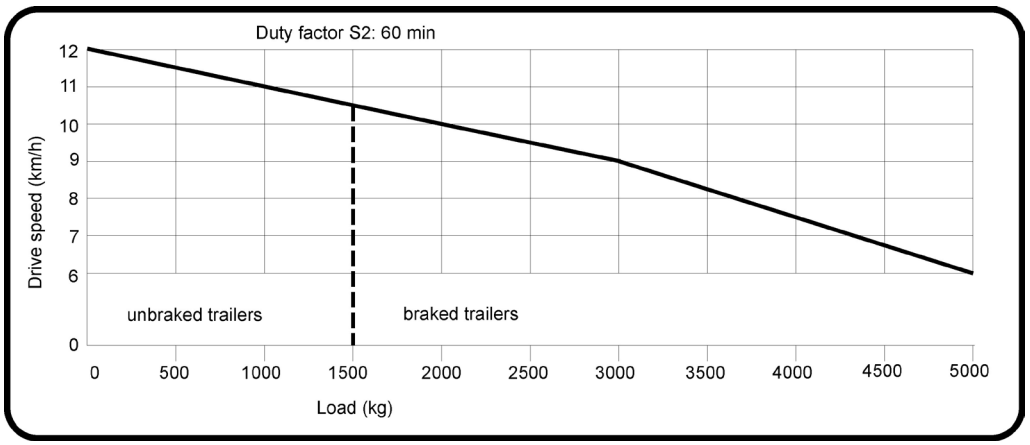

Truck features:

- High performance models
- BT E-man steering concept
- Low step-in
- Varity of towing connections
- BT Powerdrive system
- Integrated shrink film holder
- Streamlined administration
  — E-bar concept (option)
- Frequency adapted suspension (option)

TP-Technical Publications, Sweden — 746800-040, version 4, 1506

TOYOTA INDUSTRIAL EQUIPMENT

TOYOTA MATERIAL HANDLING IN EUROPE, MANAGING THE TOYOTA AND BT MATERIALS HANDLING BRANDS IN EUROPE

TOYOTA

MATERIAL HANDLING